ELECTI KUT TRACK

track type

spotlight

Aluminum body, aluminum extrusion heatsink
High efficiency reflector
Constant current LED driver
Electrostatic powder coating paint
Optional body colors

ENEC Standards
Made in TURKEY

LED | 230V | IP20 | CRI >80 | 60.000h L80 | McAdam C3

PRODUCT CODE	W	Height	Lenght	Temp	Lumen*
ELECKUT.20.90.N.4.19	20	150	Ø90	4000K	2300
ELECKUT.20.90.N.4.40	20	150	Ø90	4000K	2100
ELECKUT.30.90.N.4.19	30	150	Ø90	4000K	3600
ELECKUT.30.90.N.4.40	30	150	Ø90	4000K	3400

** According to 4000K light temperature*

BASIC OPTIONS

- on/off — on/off Control (No Dimmable)
- 230V AC — Input Voltage 230V/AC
- CRI >80 — Color Rendering Index >80
- 4K — Light Temperature 4000K
- Light Beam 19°, 40°
- W — White Body Color

REFLECTOR OPTIONS

Chrome | Copper | Gold | Platinium | Black

PRODUCT CODING

Product Name	Product Power	Product Size	Control System					Color Temperature			Light Beam
XX	XX	XX	on/off	1-10V	PUSH	TRIAC	DALI	3K	4K	6.5K	XX
XX	XX	XX	N	V	P	T	D	3	4	6	XX

CUSTOMIZE OPTIONS

Dimmable 1-10V	Dimmable PUSH	Dimmable TRIAC	Dimmable DALI	Input Voltage 24V/DC	Light Temperature 3000K	Light Temperature 6500K	Dynamic White	Color Rendering Index >90	Black Body Color	EMERGENCY KIT
1-10V	PUSH	TRIAC	DALI	24V DC	3K	6.5K	DYN	CRI >90	B	E

TECHNICAL DRAWINGS

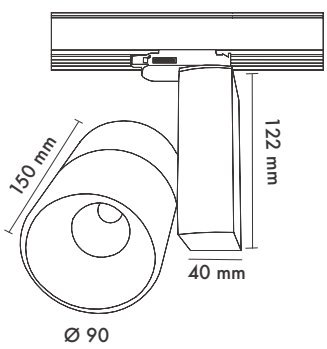

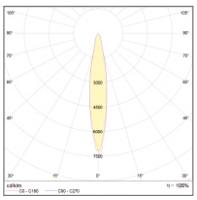

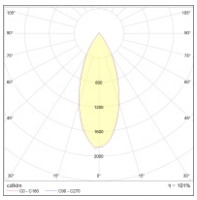

** For different options, please contact our team.*